Maskinfötter

Rostfritt stål, godkänd enligt FDA





TYP (BASPLATTA)
- Typ **C3**: polerade, vulkaniserat gummi, svart
- Typ **C4**: polerade, vulkaniserat gummi, vit färg
- Typ **C7**: polerade, vulkaniserat gummi, blå

Versioner med gängstänger:
- Typ **SK**: extern sexkantsjustering nedtill.
- Typ **TK**: plattnyckel nedtill.
- Typ **VK**: extern sexkantsjustering upptill och plattnyckel nedtill.
- Typ **W**: Med justerbar hylsa, täckt gänga och plattnyckel nedtill.

Fotplatta
Rostfritt stål AISI 304
Gängstång
AISI 303 rostfritt stål
Sexkantig mutter ISO 4032
Rostfritt stål AISI 304
Gummidyna
- Akrylnitril-butadiengummi (NBR) versioner C3 och C7.
- Silikongummi (MVQ) version C4.
- Godkänt enligt FDA
- Hårdhet 85±5 Shore A
- Vulkaniserad

KÄNNETECKEN OCH ANVÄNDNING

Maskinfoten GN 17 lämpar sig för användning i aggressiva miljöer.
De sluttande ytorna för avrinning och den höga kvaliteten på basplattan underlättar rengöring och hindrar att det samlas damm och smuts. Underläggen av vulkaniserat gummi är godkända enligt FDA och förseglar basen mot viloytan, och gör att fötterna kan användas exempelvis på platser för livsmedelsförädling eller inom läkemedelsindustrin.
Maskinfötterna levereras monterade och kan inte tas isär.

PÅ FÖRFRÅGAN

Gummidyna finns i flera färger

MASKINFÖTTERNAS BELASTNINGSKAPACITET

De statiska belastningsvärden som anges i tabellen avser laboratorietester där belastningen anbringas vinkelrätt mot underlaget (utan gummiskiva).
För de värden som visas i tabellen kan borttagande av lasten orsaka små deformationer av fotplattan. Under verkliga användningsförhållanden, måste också eventuella vinkel- eller sido belastningar beaktas på maskinfoten som minskar belastingskapaciteten.
Detaljerna som anges beträffande styrka är icke-bindande riktvärden och innebär inte något ansvar.
Det är användarens ansvar att avgöra från fall till fall, om produkten är lämplig för avsedd användning.
De angivna värdena kan påverkas av miljöfaktorer.

Proprietà dei modelli riservata ai termini di legge. Disegni e immagini non riproducibili se non citando la fonte.

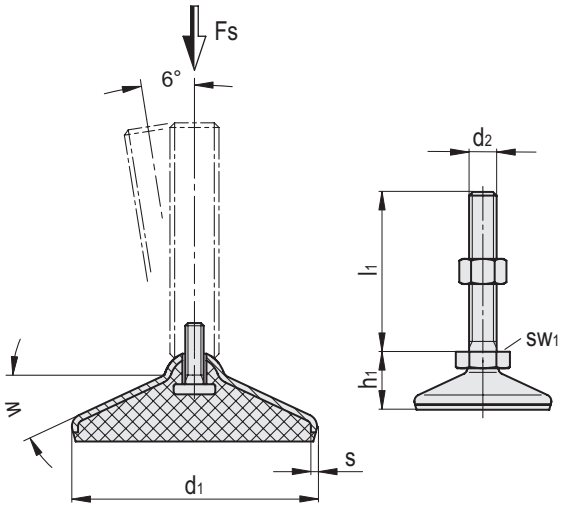

GN 17-SK

INOX STAINLESS STEEL

Kod	Benämning	d_1	d_2	h_1	l_1	w [°]	s	sw_1	Statisk belastning [KN]	⚖
GN.20301	GN 17-60-M8-40-C3-SK	60	M8	31	40	32	2	17	8	124
GN.20302	GN 17-60-M8-50-C3-SK	60	M8	31	50	32	2	17	8	127
GN.20303	GN 17-60-M8-63-C3-SK	60	M8	31	63	32	2	17	8	132
GN.20304	GN 17-60-M10-50-C3-SK	60	M10	31	50	32	2	17	14	142
GN.20305	GN 17-60-M10-60-C3-SK	60	M10	31	60	32	2	17	14	146
GN.20306	GN 17-60-M10-80-C3-SK	60	M10	31	80	32	2	17	14	156
GN.20307	GN 17-60-M10-100-C3-SK	60	M10	31	100	32	2	17	14	167
GN.20308	GN 17-60-M12-60-C3-SK	60	M12	31	60	32	2	17	14	163
GN.20309	GN 17-60-M12-80-C3-SK	60	M12	31	80	32	2	17	14	177
GN.20310	GN 17-60-M12-100-C3-SK	60	M12	31	100	32	2	17	14	192
GN.20311	GN 17-60-M12-125-C3-SK	60	M12	31	125	32	2	17	14	209
GN.20312	GN 17-80-M8-40-C3-SK	80	M8	33	40	26	2	17	8	196
GN.20313	GN 17-80-M8-50-C3-SK	80	M8	33	50	26	2	17	8	199
GN.20314	GN 17-80-M8-63-C3-SK	80	M8	33	63	26	2	17	8	204
GN.20315	GN 17-80-M10-50-C3-SK	80	M10	33	50	26	2	17	14	215
GN.20316	GN 17-80-M10-60-C3-SK	80	M10	33	60	26	2	17	14	219
GN.20317	GN 17-80-M10-80-C3-SK	80	M10	33	80	26	2	17	14	229
GN.20318	GN 17-80-M10-100-C3-SK	80	M10	33	100	26	2	17	14	240
GN.20319	GN 17-80-M12-60-C3-SK	80	M12	33	60	26	2	17	14	236
GN.20320	GN 17-80-M12-80-C3-SK	80	M12	33	80	26	2	17	14	250
GN.20321	GN 17-80-M12-100-C3-SK	80	M12	33	100	26	2	17	14	265
GN.20322	GN 17-80-M12-125-C3-SK	80	M12	33	125	26	2	17	14	282
GN.20323	GN 17-100-M8-40-C3-SK	100	M8	35	40	22	2	17	8	291
GN.20324	GN 17-100-M8-50-C3-SK	100	M8	35	50	22	2	17	8	294
GN.20325	GN 17-100-M8-63-C3-SK	100	M8	35	63	22	2	17	8	299
GN.20326	GN 17-100-M10-50-C3-SK	100	M10	35	50	22	2	17	14	310
GN.20327	GN 17-100-M10-60-C3-SK	100	M10	35	60	22	2	17	14	314
GN.20328	GN 17-100-M10-80-C3-SK	100	M10	35	80	22	2	17	14	324
GN.20329	GN 17-100-M10-100-C3-SK	100	M10	35	100	22	2	17	14	335
GN.20330	GN 17-100-M12-60-C3-SK	100	M12	35	60	22	2	17	16	331
GN.20331	GN 17-100-M12-80-C3-SK	100	M12	35	80	22	2	17	16	345
GN.20332	GN 17-100-M12-100-C3-SK	100	M12	35	100	22	2	17	16	360
GN.20333	GN 17-100-M12-125-C3-SK	100	M12	35	125	22	2	17	16	377

Ganter Norm®

Proprietà dei modelli riservata ai termini di legge. Disegni e immagini non riproducibili se non citando la fonte.

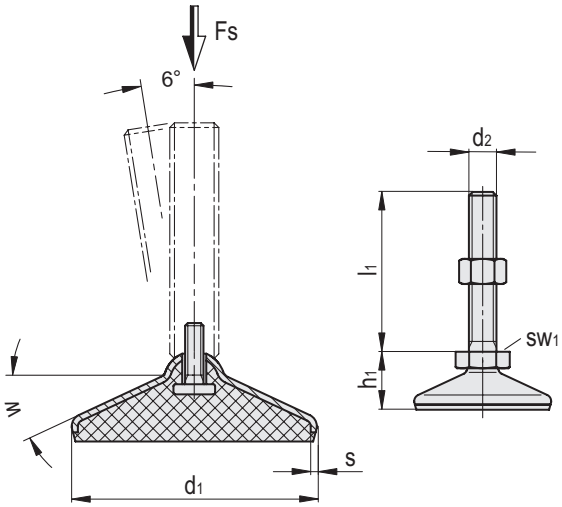

GN 17-SK

INOX STAINLESS STEEL

Kod	Benämning	d_1	d_2	h_1	l_1	w [°]	s	sw_1	Statisk belastning [KN]	⚖
GN.85001	GN 17-60-M8-40-C4-SK	60	M8	31	40	32	2	17	8	130
GN.85003	GN 17-60-M8-50-C4-SK	60	M8	31	50	32	2	17	8	134
GN.85005	GN 17-60-M8-63-C4-SK	60	M8	31	63	32	2	17	8	139
GN.85011	GN 17-60-M10-50-C4-SK	60	M10	31	50	32	2	17	14	151
GN.85013	GN 17-60-M10-60-C4-SK	60	M10	31	60	32	2	17	14	157
GN.85015	GN 17-60-M10-80-C4-SK	60	M10	31	80	32	2	17	14	169
GN.85017	GN 17-60-M10-100-C4-SK	60	M10	31	100	32	2	17	14	181
GN.85021	GN 17-60-M12-60-C4-SK	60	M12	31	60	32	2	17	14	179
GN.85023	GN 17-60-M12-80-C4-SK	60	M12	31	80	32	2	17	14	196
GN.85025	GN 17-60-M12-100-C4-SK	60	M12	31	100	32	2	17	14	214
GN.85027	GN 17-60-M12-125-C4-SK	60	M12	31	125	32	2	17	14	236
GN.85081	GN 17-80-M8-40-C4-SK	80	M8	33	40	26	2	17	8	203
GN.85083	GN 17-80-M8-50-C4-SK	80	M8	33	50	26	2	17	8	207
GN.85085	GN 17-80-M8-63-C4-SK	80	M8	33	63	26	2	17	8	212
GN.85091	GN 17-80-M10-50-C4-SK	80	M10	33	50	26	2	17	14	223
GN.85093	GN 17-80-M10-60-C4-SK	80	M10	33	60	26	2	17	14	230
GN.85095	GN 17-80-M10-80-C4-SK	80	M10	33	80	26	2	17	14	242
GN.85097	GN 17-80-M10-100-C4-SK	80	M10	33	100	26	2	17	14	254
GN.85101	GN 17-80-M12-60-C4-SK	80	M12	33	60	26	2	17	14	252
GN.85103	GN 17-80-M12-80-C4-SK	80	M12	33	80	26	2	17	14	269
GN.85105	GN 17-80-M12-100-C4-SK	80	M12	33	100	26	2	17	14	287
GN.85107	GN 17-80-M12-125-C4-SK	80	M12	33	125	26	2	17	14	309
GN.85221	GN 17-100-M8-40-C4-SK	100	M8	35	40	22	2	17	8	298
GN.85223	GN 17-100-M8-50-C4-SK	100	M8	35	50	22	2	17	8	302
GN.85225	GN 17-100-M8-63-C4-SK	100	M8	35	63	22	2	17	8	307
GN.85231	GN 17-100-M10-50-C4-SK	100	M10	35	50	22	2	17	14	318
GN.85233	GN 17-100-M10-60-C4-SK	100	M10	35	60	22	2	17	14	325
GN.85235	GN 17-100-M10-80-C4-SK	100	M10	35	80	22	2	17	14	337
GN.85237	GN 17-100-M10-100-C4-SK	100	M10	35	100	22	2	17	14	349
GN.85241	GN 17-100-M12-60-C4-SK	100	M12	35	60	22	2	17	16	347
GN.85243	GN 17-100-M12-80-C4-SK	100	M12	35	80	22	2	17	16	364
GN.85245	GN 17-100-M12-100-C4-SK	100	M12	35	100	22	2	17	16	382
GN.85247	GN 17-100-M12-125-C4-SK	100	M12	35	125	22	2	17	16	404

Proprietà dei modelli riservata ai termini di legge. Disegni e immagini non riproducibili se non citando la fonte.

Ganter Norm

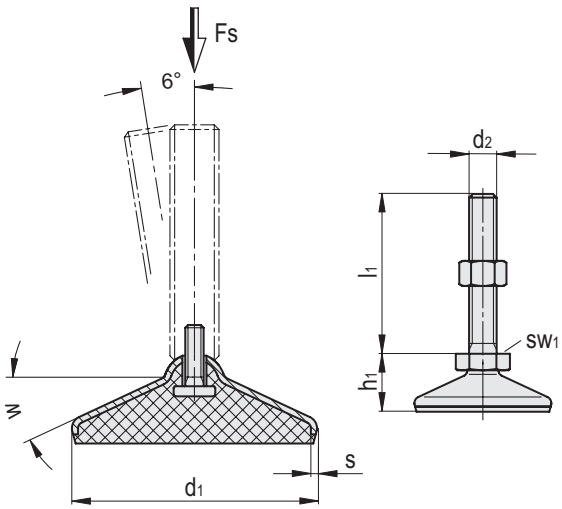

GN 17-SK

INOX STAINLESS STEEL

Kod	Benämning	d_1	d_2	h_1	l_1	w [°]	s	sw_1	Statisk belastning [KN]	⚖
GN.85002	GN 17-60-M8-40-C7-SK	60	M8	31	40	32	2	17	8	130
GN.85004	GN 17-60-M8-50-C7-SK	60	M8	31	50	32	2	17	8	134
GN.85006	GN 17-60-M8-63-C7-SK	60	M8	31	63	32	2	17	8	139
GN.85012	GN 17-60-M10-50-C7-SK	60	M10	31	50	32	2	17	14	151
GN.85014	GN 17-60-M10-60-C7-SK	60	M10	31	60	32	2	17	14	157
GN.85016	GN 17-60-M10-80-C7-SK	60	M10	31	80	32	2	17	14	169
GN.85018	GN 17-60-M10-100-C7-SK	60	M10	31	100	32	2	17	14	181
GN.85022	GN 17-60-M12-60-C7-SK	60	M12	31	60	32	2	17	14	179
GN.85024	GN 17-60-M12-80-C7-SK	60	M12	31	80	32	2	17	14	196
GN.85026	GN 17-60-M12-100-C7-SK	60	M12	31	100	32	2	17	14	214
GN.85028	GN 17-60-M12-125-C7-SK	60	M12	31	125	32	2	17	14	236
GN.85082	GN 17-80-M8-40-C7-SK	80	M8	33	40	26	2	17	8	203
GN.85084	GN 17-80-M8-50-C7-SK	80	M8	33	50	26	2	17	8	207
GN.85086	GN 17-80-M8-63-C7-SK	80	M8	33	63	26	2	17	8	212
GN.85092	GN 17-80-M10-50-C7-SK	80	M10	33	50	26	2	17	14	223
GN.85094	GN 17-80-M10-60-C7-SK	80	M10	33	60	26	2	17	14	230
GN.85096	GN 17-80-M10-80-C7-SK	80	M10	33	80	26	2	17	14	242
GN.85098	GN 17-80-M10-100-C7-SK	80	M10	33	100	26	2	17	14	254
GN.85102	GN 17-80-M12-60-C7-SK	80	M12	33	60	26	2	17	14	252
GN.85104	GN 17-80-M12-80-C7-SK	80	M12	33	80	26	2	17	14	269
GN.85106	GN 17-80-M12-100-C7-SK	80	M12	33	100	26	2	17	14	287
GN.85108	GN 17-80-M12-125-C7-SK	80	M12	33	125	26	2	17	14	309
GN.85222	GN 17-100-M8-40-C7-SK	100	M8	35	40	22	2	17	8	298
GN.85224	GN 17-100-M8-50-C7-SK	100	M8	35	50	22	2	17	8	302
GN.85226	GN 17-100-M8-63-C7-SK	100	M8	35	63	22	2	17	8	307
GN.85232	GN 17-100-M10-50-C7-SK	100	M10	35	50	22	2	17	14	318
GN.85234	GN 17-100-M10-60-C7-SK	100	M10	35	60	22	2	17	14	325
GN.85236	GN 17-100-M10-80-C7-SK	100	M10	35	80	22	2	17	14	337
GN.85238	GN 17-100-M10-100-C7-SK	100	M10	35	100	22	2	17	14	349
GN.85242	GN 17-100-M12-60-C7-SK	100	M12	35	60	22	2	17	16	347
GN.85244	GN 17-100-M12-80-C7-SK	100	M12	35	80	22	2	17	16	364
GN.85246	GN 17-100-M12-100-C7-SK	100	M12	35	100	22	2	17	16	382
GN.85248	GN 17-100-M12-125-C7-SK	100	M12	35	125	22	2	17	16	404

Ganter Norm®

Proprietà dei modelli riservata ai termini di legge. Disegni e immagini non riproducibili se non citando la fonte.

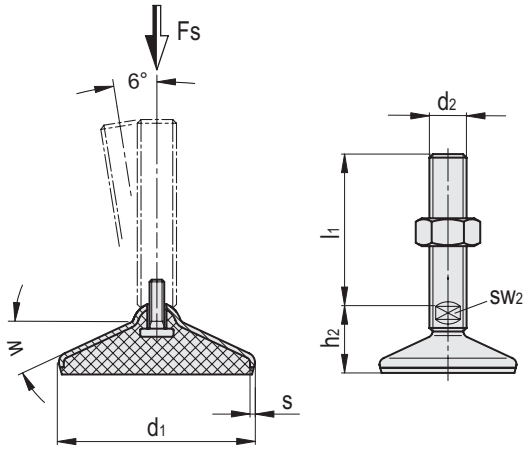

GN 17-TK

INOX STAINLESS STEEL

Kod	Benämning	d_1	d_2	l_1	h_2	w [°]	s	sw_2	Statisk belastning [KN]	⚖
GN.20351	GN 17-60-M16-75-C3-TK	60	M16	75	37	32	2	12	14	238
GN.20352	GN 17-60-M16-100-C3-TK	60	M16	100	37	32	2	12	14	271
GN.20353	GN 17-60-M16-125-C3-TK	60	M16	125	37	32	2	12	14	303
GN.20354	GN 17-60-M16-150-C3-TK	60	M16	150	37	32	2	12	14	335
GN.20355	GN 17-60-M16-200-C3-TK	60	M16	200	37	32	2	12	14	399
GN.20356	GN 17-60-M16-250-C3-TK	60	M16	250	37	32	2	12	14	463
GN.20357	GN 17-80-M16-75-C3-TK	80	M16	75	39	26	2	12	14	311
GN.20358	GN 17-80-M16-100-C3-TK	80	M16	100	39	26	2	12	14	344
GN.20359	GN 17-80-M16-125-C3-TK	80	M16	125	39	26	2	12	14	376
GN.20360	GN 17-80-M16-150-C3-TK	80	M16	150	39	26	2	12	14	408
GN.20361	GN 17-80-M16-200-C3-TK	80	M16	200	39	26	2	12	14	472
GN.20362	GN 17-80-M16-250-C3-TK	80	M16	250	39	26	2	12	14	536
GN.20363	GN 17-80-M20-75-C3-TK	80	M20	75	39	26	2	15	32	393
GN.20364	GN 17-80-M20-100-C3-TK	80	M20	100	39	26	2	15	32	452
GN.20365	GN 17-80-M20-125-C3-TK	80	M20	125	39	26	2	15	32	502
GN.20366	GN 17-80-M20-150-C3-TK	80	M20	150	39	26	2	15	32	553
GN.20367	GN 17-80-M20-200-C3-TK	80	M20	200	39	26	2	15	32	653
GN.20368	GN 17-80-M20-250-C3-TK	80	M20	250	39	26	2	15	32	753
GN.20369	GN 17-80-M24-100-C3-TK	80	M24	100	41	26	2	19	36	605
GN.20370	GN 17-80-M24-125-C3-TK	80	M24	125	41	26	2	19	36	685
GN.20371	GN 17-80-M24-150-C3-TK	80	M24	150	41	26	2	19	36	751
GN.20372	GN 17-80-M24-200-C3-TK	80	M24	200	41	26	2	19	36	897
GN.20373	GN 17-80-M24-300-C3-TK	80	M24	300	41	26	2	19	36	1447
GN.20374	GN 17-100-M16-75-C3-TK	100	M16	75	41	22	2	12	24	406
GN.20375	GN 17-100-M16-100-C3-TK	100	M16	100	41	22	2	12	24	439
GN.20376	GN 17-100-M16-125-C3-TK	100	M16	125	41	22	2	12	24	471
GN.20377	GN 17-100-M16-150-C3-TK	100	M16	150	41	22	2	12	24	503
GN.20378	GN 17-100-M16-200-C3-TK	100	M16	200	41	22	2	12	24	567
GN.20379	GN 17-100-M16-250-C3-TK	100	M16	250	41	22	2	12	24	631
GN.20380	GN 17-100-M20-75-C3-TK	100	M20	75	41	22	2	15	26	488
GN.20381	GN 17-100-M20-100-C3-TK	100	M20	100	41	22	2	15	26	547
GN.20382	GN 17-100-M20-125-C3-TK	100	M20	125	41	22	2	15	26	597
GN.20383	GN 17-100-M20-150-C3-TK	100	M20	150	41	22	2	15	26	648
GN.20384	GN 17-100-M20-200-C3-TK	100	M20	200	41	22	2	15	26	748
GN.20385	GN 17-100-M20-250-C3-TK	100	M20	250	41	22	2	15	26	848
GN.20386	GN 17-100-M24-100-C3-TK	100	M24	100	43	22	2	19	28	700
GN.20387	GN 17-100-M24-125-C3-TK	100	M24	125	43	22	2	19	28	780
GN.20388	GN 17-100-M24-150-C3-TK	100	M24	150	43	22	2	19	28	846
GN.20389	GN 17-100-M24-200-C3-TK	100	M24	200	43	22	2	19	28	992
GN.20390	GN 17-100-M24-300-C3-TK	100	M24	300	43	22	2	19	28	1542
GN.20391	GN 17-120-M20-75-C3-TK	120	M20	75	43	20	2	15	26	609
GN.20392	GN 17-120-M20-100-C3-TK	120	M20	100	43	20	2	15	26	668
GN.20393	GN 17-120-M20-125-C3-TK	120	M20	125	43	20	2	15	26	718
GN.20394	GN 17-120-M20-150-C3-TK	120	M20	150	43	20	2	15	26	769
GN.20395	GN 17-120-M20-200-C3-TK	120	M20	200	43	20	2	15	26	869
GN.20396	GN 17-120-M20-250-C3-TK	120	M20	250	43	20	2	15	26	969
GN.20397	GN 17-120-M24-100-C3-TK	120	M24	100	46	20	2	19	26	821
GN.20398	GN 17-120-M24-125-C3-TK	120	M24	125	46	20	2	19	26	901
GN.20399	GN 17-120-M24-150-C3-TK	120	M24	150	46	20	2	19	26	967
GN.20400	GN 17-120-M24-200-C3-TK	120	M24	200	46	20	2	19	26	1113
GN.20401	GN 17-120-M24-300-C3-TK	120	M24	300	46	20	2	19	26	1663
GN.20402	GN 17-120-M30-100-C3-TK	120	M30	100	50	20	2	24	26	1163
GN.20403	GN 17-120-M30-125-C3-TK	120	M30	125	50	20	2	24	26	1259
GN.20404	GN 17-120-M30-150-C3-TK	120	M30	150	50	20	2	24	26	1377
GN.20405	GN 17-120-M30-200-C3-TK	120	M30	200	50	20	2	24	26	1614
GN.20406	GN 17-120-M30-300-C3-TK	120	M30	300	50	20	2	24	26	2125

Proprietà dei modelli riservata ai termini di legge. Disegni e immagini non riproducibili se non citando la fonte.

Ganter Norm

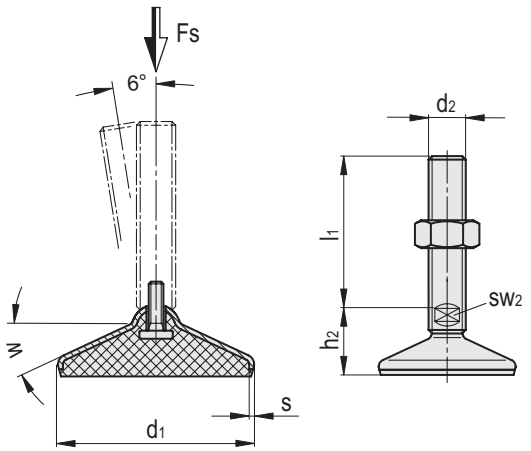

GN 17-TK

INOX STAINLESS STEEL

Kod	Benämning	d_1	d_2	l_1	h_2	w [°]	s	sw_2	Statisk belastning [KN]	⚖
GN.85031	GN 17-60-M16-75-C4-TK	60	M16	75	37	32	2	12	14	273
GN.85035	GN 17-60-M16-100-C4-TK	60	M16	100	37	32	2	12	14	312
GN.85039	GN 17-60-M16-125-C4-TK	60	M16	125	37	32	2	12	14	351
GN.85045	GN 17-60-M16-150-C4-TK	60	M16	150	37	32	2	12	14	390
GN.85053	GN 17-60-M16-200-C4-TK	60	M16	200	37	32	2	12	14	469
GN.85057	GN 17-60-M16-250-C4-TK	60	M16	250	37	32	2	12	14	547
GN.85111	GN 17-80-M16-75-C4-TK	80	M16	75	39	26	2	12	14	345
GN.85115	GN 17-80-M16-100-C4-TK	80	M16	100	39	26	2	12	14	385
GN.85119	GN 17-80-M16-125-C4-TK	80	M16	125	39	26	2	12	14	424
GN.85125	GN 17-80-M16-150-C4-TK	80	M16	150	39	26	2	12	14	463
GN.85133	GN 17-80-M16-200-C4-TK	80	M16	200	39	26	2	12	14	541
GN.85137	GN 17-80-M16-250-C4-TK	80	M16	250	39	26	2	12	14	620
GN.85141	GN 17-80-M20-75-C4-TK	80	M20	75	39	26	2	15	32	458
GN.85143	GN 17-80-M20-100-C4-TK	80	M20	100	39	26	2	15	32	519
GN.85147	GN 17-80-M20-125-C4-TK	80	M20	125	39	26	2	15	32	580
GN.85151	GN 17-80-M20-150-C4-TK	80	M20	150	39	26	2	15	32	642
GN.85159	GN 17-80-M20-200-C4-TK	80	M20	200	39	26	2	15	32	764
GN.85165	GN 17-80-M20-250-C4-TK	80	M20	250	39	26	2	15	32	887
GN.85171	GN 17-80-M24-100-C4-TK	80	M24	100	41	26	2	19	36	702
GN.85175	GN 17-80-M24-125-C4-TK	80	M24	125	41	26	2	19	36	790
GN.85177	GN 17-80-M24-150-C4-TK	80	M24	150	41	26	2	19	36	878
GN.85183	GN 17-80-M24-200-C4-TK	80	M24	200	41	26	2	19	36	1055
GN.85191	GN 17-80-M24-300-C4-TK	80	M24	300	41	26	2	19	36	1410
GN.85251	GN 17-100-M16-75-C4-TK	100	M16	75	41	22	2	12	24	440
GN.85255	GN 17-100-M16-100-C4-TK	100	M16	100	41	22	2	12	24	480
GN.85259	GN 17-100-M16-125-C4-TK	100	M16	125	41	22	2	12	24	519
GN.85265	GN 17-100-M16-150-C4-TK	100	M16	150	41	22	2	12	24	558
GN.85273	GN 17-100-M16-200-C4-TK	100	M16	200	41	22	2	12	24	636
GN.85277	GN 17-100-M16-250-C4-TK	100	M16	250	41	22	2	12	24	715
GN.85281	GN 17-100-M20-75-C4-TK	100	M20	75	41	22	2	15	26	553
GN.85283	GN 17-100-M20-100-C4-TK	100	M20	100	41	22	2	15	26	614
GN.85287	GN 17-100-M20-125-C4-TK	100	M20	125	41	22	2	15	26	675
GN.85291	GN 17-100-M20-150-C4-TK	100	M20	150	41	22	2	15	26	736
GN.85299	GN 17-100-M20-200-C4-TK	100	M20	200	41	22	2	15	26	859
GN.85305	GN 17-100-M20-250-C4-TK	100	M20	250	41	22	2	15	26	982
GN.85311	GN 17-100-M24-100-C4-TK	100	M24	100	43	22	2	19	28	797
GN.85315	GN 17-100-M24-125-C4-TK	100	M24	125	43	22	2	19	28	885
GN.85317	GN 17-100-M24-150-C4-TK	100	M24	150	43	22	2	19	28	973
GN.85323	GN 17-100-M24-200-C4-TK	100	M24	200	43	22	2	19	28	1150
GN.85331	GN 17-100-M24-300-C4-TK	100	M24	300	43	22	2	19	28	1505
GN.85351	GN 17-120-M20-75-C4-TK	120	M20	75	43	20	2	15	26	674
GN.85353	GN 17-120-M20-100-C4-TK	120	M20	100	43	20	2	15	26	735
GN.85355	GN 17-120-M20-125-C4-TK	120	M20	125	43	20	2	15	26	797
GN.85357	GN 17-120-M20-150-C4-TK	120	M20	150	43	20	2	15	26	858
GN.85359	GN 17-120-M20-200-C4-TK	120	M20	200	43	20	2	15	26	980
GN.85361	GN 17-120-M20-250-C4-TK	120	M20	250	43	20	2	15	26	1105
GN.85371	GN 17-120-M24-100-C4-TK	120	M24	100	46	20	2	19	26	918
GN.85373	GN 17-120-M24-125-C4-TK	120	M24	125	46	20	2	19	26	1005
GN.85375	GN 17-120-M24-150-C4-TK	120	M24	150	46	20	2	19	26	1095
GN.85377	GN 17-120-M24-200-C4-TK	120	M24	200	46	20	2	19	26	1270
GN.85379	GN 17-120-M24-300-C4-TK	120	M24	300	46	20	2	19	26	1625
GN.85391	GN 17-120-M30-100-C4-TK	120	M30	100	50	20	2	24	26	1295
GN.85393	GN 17-120-M30-125-C4-TK	120	M30	125	50	20	2	24	26	1430
GN.85395	GN 17-120-M30-150-C4-TK	120	M30	150	50	20	2	24	26	1570
GN.85397	GN 17-120-M30-200-C4-TK	120	M30	200	50	20	2	24	26	1845
GN.85399	GN 17-120-M30-300-C4-TK	120	M30	300	50	20	2	24	26	2395

Ganter Norm®

Proprietà dei modelli riservata ai termini di legge. Disegni e immagini non riproducibili se non citando la fonte.

7/2026

elesa

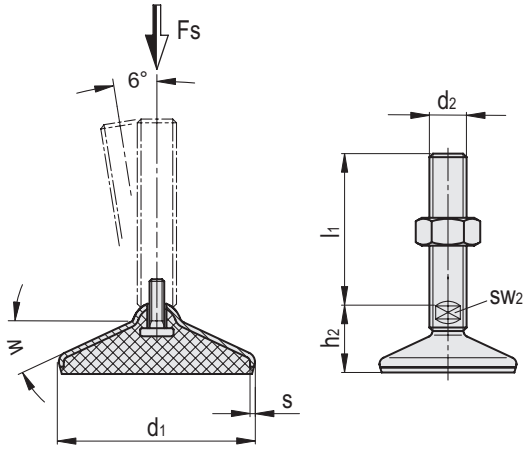

GN 17-TK

INOX STAINLESS STEEL

Kod	Benämning	d_1	d_2	l_1	h_2	w [°]	s	sw_2	Statisk belastning [KN]	⚖
GN.85033	GN 17-60-M16-75-C7-TK	60	M16	75	37	32	2	12	14	273
GN.85037	GN 17-60-M16-100-C7-TK	60	M16	100	37	32	2	12	14	312
GN.85041	GN 17-60-M16-125-C7-TK	60	M16	125	37	32	2	12	14	351
GN.85047	GN 17-60-M16-150-C7-TK	60	M16	150	37	32	2	12	14	390
GN.85054	GN 17-60-M16-200-C7-TK	60	M16	200	37	32	2	12	14	469
GN.85058	GN 17-60-M16-250-C7-TK	60	M16	250	37	32	2	12	14	547
GN.85113	GN 17-80-M16-75-C7-TK	80	M16	75	39	26	2	12	14	345
GN.85117	GN 17-80-M16-100-C7-TK	80	M16	100	39	26	2	12	14	385
GN.85121	GN 17-80-M16-125-C7-TK	80	M16	125	39	26	2	12	14	424
GN.85127	GN 17-80-M16-150-C7-TK	80	M16	150	39	26	2	12	14	463
GN.85134	GN 17-80-M16-200-C7-TK	80	M16	200	39	26	2	12	14	541
GN.85138	GN 17-80-M16-250-C7-TK	80	M16	250	39	26	2	12	14	620
GN.85142	GN 17-80-M20-75-C7-TK	80	M20	75	39	26	2	15	32	458
GN.85145	GN 17-80-M20-100-C7-TK	80	M20	100	39	26	2	15	32	519
GN.85149	GN 17-80-M20-125-C7-TK	80	M20	125	39	26	2	15	32	580
GN.85153	GN 17-80-M20-150-C7-TK	80	M20	150	39	26	2	15	32	642
GN.85161	GN 17-80-M20-200-C7-TK	80	M20	200	39	26	2	15	32	764
GN.85166	GN 17-80-M20-250-C7-TK	80	M20	250	39	26	2	15	32	887
GN.85173	GN 17-80-M24-100-C7-TK	80	M24	100	41	26	2	19	36	702
GN.85176	GN 17-80-M24-125-C7-TK	80	M24	125	41	26	2	19	36	790
GN.85179	GN 17-80-M24-150-C7-TK	80	M24	150	41	26	2	19	36	878
GN.85185	GN 17-80-M24-200-C7-TK	80	M24	200	41	26	2	19	36	1055
GN.85192	GN 17-80-M24-300-C7-TK	80	M24	300	41	26	2	19	36	1410
GN.85253	GN 17-100-M16-75-C7-TK	100	M16	75	41	22	2	12	24	440
GN.85257	GN 17-100-M16-100-C7-TK	100	M16	100	41	22	2	12	24	480
GN.85261	GN 17-100-M16-125-C7-TK	100	M16	125	41	22	2	12	24	519
GN.85267	GN 17-100-M16-150-C7-TK	100	M16	150	41	22	2	12	24	558
GN.85274	GN 17-100-M16-200-C7-TK	100	M16	200	41	22	2	12	24	636
GN.85278	GN 17-100-M16-250-C7-TK	100	M16	250	41	22	2	12	24	715
GN.85282	GN 17-100-M20-75-C7-TK	100	M20	75	41	22	2	15	26	553
GN.85285	GN 17-100-M20-100-C7-TK	100	M20	100	41	22	2	15	26	614
GN.85289	GN 17-100-M20-125-C7-TK	100	M20	125	41	22	2	15	26	675
GN.85293	GN 17-100-M20-150-C7-TK	100	M20	150	41	22	2	15	26	736
GN.85301	GN 17-100-M20-200-C7-TK	100	M20	200	41	22	2	15	26	859
GN.85306	GN 17-100-M20-250-C7-TK	100	M20	250	41	22	2	15	26	982
GN.85313	GN 17-100-M24-100-C7-TK	100	M24	100	43	22	2	19	28	797
GN.85316	GN 17-100-M24-125-C7-TK	100	M24	125	43	22	2	19	28	885
GN.85319	GN 17-100-M24-150-C7-TK	100	M24	150	43	22	2	19	28	973
GN.85325	GN 17-100-M24-200-C7-TK	100	M24	200	43	22	2	19	28	1150
GN.85332	GN 17-100-M24-300-C7-TK	100	M24	300	43	22	2	19	28	1505
GN.85352	GN 17-120-M20-75-C7-TK	120	M20	75	43	20	2	15	26	674
GN.85354	GN 17-120-M20-100-C7-TK	120	M20	100	43	20	2	15	26	735
GN.85356	GN 17-120-M20-125-C7-TK	120	M20	125	43	20	2	15	26	797
GN.85358	GN 17-120-M20-150-C7-TK	120	M20	150	43	20	2	15	26	858
GN.85360	GN 17-120-M20-200-C7-TK	120	M20	200	43	20	2	15	26	980
GN.85362	GN 17-120-M20-250-C7-TK	120	M20	250	43	20	2	15	26	1105
GN.85372	GN 17-120-M24-100-C7-TK	120	M24	100	46	20	2	19	26	918
GN.85374	GN 17-120-M24-125-C7-TK	120	M24	125	46	20	2	19	26	1005
GN.85376	GN 17-120-M24-150-C7-TK	120	M24	150	46	20	2	19	26	1095
GN.85378	GN 17-120-M24-200-C7-TK	120	M24	200	46	20	2	19	26	1270
GN.85380	GN 17-120-M24-300-C7-TK	120	M24	300	46	20	2	19	26	1625
GN.85392	GN 17-120-M30-100-C7-TK	120	M30	100	50	20	2	24	26	1295
GN.85394	GN 17-120-M30-125-C7-TK	120	M30	125	50	20	2	24	26	1430
GN.85396	GN 17-120-M30-150-C7-TK	120	M30	150	50	20	2	24	26	1570
GN.85398	GN 17-120-M30-200-C7-TK	120	M30	200	50	20	2	24	26	1845
GN.85400	GN 17-120-M30-300-C7-TK	120	M30	300	50	20	2	24	26	2395

Proprietà dei modelli riservata ai termini di legge. Disegni e immagini non riproducibili se non citando la fonte.

Ganter Norm

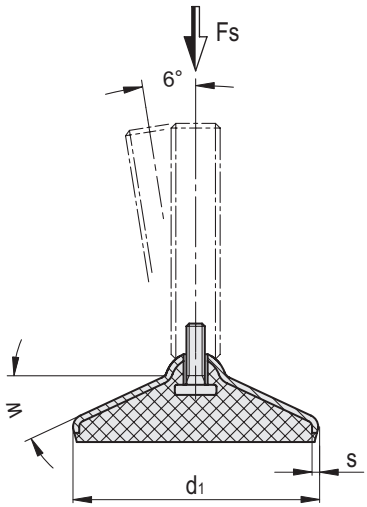

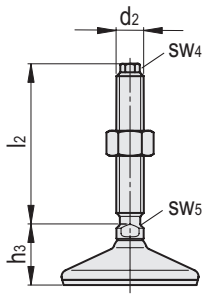

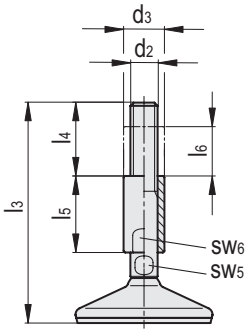

GN 17-VK

INOX STAINLESS STEEL

Kod	Benämning	l_2	d_1	d_2	h_3	w [°]	s	sw_4	sw_5	Statisk belastning [KN]	⚖
GN.20421	GN 17-60-M16-75-C3-VK	75	60	M16	33	32	2	10	12	14	229
GN.20422	GN 17-60-M16-100-C3-VK	100	60	M16	33	32	2	10	12	14	263
GN.20423	GN 17-60-M16-125-C3-VK	125	60	M16	33	32	2	10	12	14	295
GN.20424	GN 17-60-M16-150-C3-VK	150	60	M16	33	32	2	10	12	14	328
GN.20425	GN 17-80-M16-75-C3-VK	75	80	M16	35	26	2	10	12	14	302
GN.20426	GN 17-80-M16-100-C3-VK	100	80	M16	35	26	2	10	12	14	336
GN.20427	GN 17-80-M16-125-C3-VK	125	80	M16	35	26	2	10	12	14	368
GN.20428	GN 17-80-M16-150-C3-VK	150	80	M16	35	26	2	10	12	14	401
GN.20429	GN 17-80-M20-100-C3-VK	100	80	M20	36	26	2	13	16	32	443
GN.20430	GN 17-80-M20-125-C3-VK	125	80	M20	36	26	2	13	16	32	494
GN.20431	GN 17-80-M20-150-C3-VK	150	80	M20	36	26	2	13	16	32	546
GN.20432	GN 17-80-M20-200-C3-VK	200	80	M20	36	26	2	13	16	32	651
GN.20433	GN 17-80-M24-100-C3-VK	100	80	M24	38	26	2	17	20	36	591
GN.20434	GN 17-80-M24-150-C3-VK	150	80	M24	38	26	2	17	20	36	739
GN.20435	GN 17-80-M24-200-C3-VK	200	80	M24	38	26	2	17	20	36	885
GN.20436	GN 17-100-M16-75-C3-VK	75	100	M16	37	22	2	10	12	24	397
GN.20437	GN 17-100-M16-100-C3-VK	100	100	M16	37	22	2	10	12	24	431
GN.20438	GN 17-100-M16-125-C3-VK	125	100	M16	37	22	2	10	12	24	463
GN.20439	GN 17-100-M16-150-C3-VK	150	100	M16	37	22	2	10	12	24	496
GN.20440	GN 17-100-M20-100-C3-VK	100	100	M20	38	22	2	13	16	26	538
GN.20441	GN 17-100-M20-125-C3-VK	125	100	M20	38	22	2	13	16	26	589
GN.20442	GN 17-100-M20-150-C3-VK	150	100	M20	38	22	2	13	16	26	641
GN.20443	GN 17-100-M20-200-C3-VK	200	100	M20	38	22	2	13	16	26	746
GN.20444	GN 17-100-M24-100-C3-VK	100	100	M24	40	22	2	17	20	28	686
GN.20445	GN 17-100-M24-150-C3-VK	150	100	M24	40	22	2	17	20	28	834
GN.20446	GN 17-100-M24-200-C3-VK	200	100	M24	40	22	2	17	20	28	980

GN 17-W

Kod	Benämning	l_3	d_1	l_4	l_5	l_6	d_2	d_3	w [°]	s	sw_5	sw_6	Statisk belastning [KN]	⚖
GN.20461	GN 17-60-M16-129-C3-W	129	60	45	45	29	M16	24	32	2	12	20	14	327
GN.20462	GN 17-60-M16-154-C3-W	154	60	45	45	29	M16	24	32	2	12	20	14	364
GN.20463	GN 17-60-M16-179-C3-W	179	60	45	45	29	M16	24	32	2	12	20	14	405
GN.20464	GN 17-60-M16-204-C3-W	204	60	45	45	29	M16	24	32	2	12	20	14	445
GN.20465	GN 17-80-M16-131-C3-W	131	80	45	45	29	M16	24	26	2	12	20	14	400
GN.20466	GN 17-80-M16-156-C3-W	156	80	45	45	29	M16	24	26	2	12	20	14	437
GN.20467	GN 17-80-M16-181-C3-W	181	80	45	45	29	M16	24	26	2	12	20	14	478
GN.20468	GN 17-80-M16-206-C3-W	206	80	45	45	29	M16	24	26	2	12	20	14	518
GN.20469	GN 17-80-M20-155-C3-W	155	80	56	56	36	M20	30	26	2	16	24	32	618
GN.20470	GN 17-80-M20-180-C3-W	180	80	56	56	36	M20	30	26	2	16	24	32	681
GN.20471	GN 17-80-M20-205-C3-W	205	80	56	56	36	M20	30	26	2	16	24	32	744
GN.20472	GN 17-80-M20-255-C3-W	255	80	56	56	36	M20	30	26	2	16	24	32	868
GN.20473	GN 17-80-M24-179-C3-W	179	80	67	67	42	M24	35	26	2	20	30	36	920
GN.20474	GN 17-80-M24-229-C3-W	229	80	67	67	42	M24	35	26	2	20	30	36	1098
GN.20475	GN 17-80-M24-279-C3-W	279	80	67	67	42	M24	35	26	2	20	30	36	1277
GN.20476	GN 17-100-M16-133-C3-W	133	100	45	45	29	M16	24	22	2	12	20	24	495
GN.20477	GN 17-100-M16-158-C3-W	158	100	45	45	29	M16	24	22	2	12	20	24	532
GN.20478	GN 17-100-M16-183-C3-W	183	100	45	45	29	M16	24	22	2	12	20	24	573
GN.20479	GN 17-100-M16-208-C3-W	208	100	45	45	29	M16	24	22	2	12	20	24	613
GN.20480	GN 17-100-M20-157-C3-W	157	100	56	56	36	M20	30	22	2	16	24	26	713
GN.20481	GN 17-100-M20-182-C3-W	182	100	56	56	36	M20	30	22	2	16	24	26	776
GN.20482	GN 17-100-M20-207-C3-W	207	100	56	56	36	M20	30	22	2	16	24	26	839
GN.20483	GN 17-100-M20-257-C3-W	257	100	56	56	36	M20	30	22	2	16	24	26	963
GN.20484	GN 17-100-M24-181-C3-W	181	100	67	67	42	M24	35	22	2	20	30	28	1015
GN.20485	GN 17-100-M24-231-C3-W	231	100	67	67	42	M24	35	22	2	20	30	28	1193
GN.20486	GN 17-100-M24-281-C3-W	281	100	67	67	42	M24	35	22	2	20	30	28	1372

Ganter Norm®

Proprietà dei modelli riservata ai termini di legge. Disegni e immagini non riproducibili se non citando la fonte.

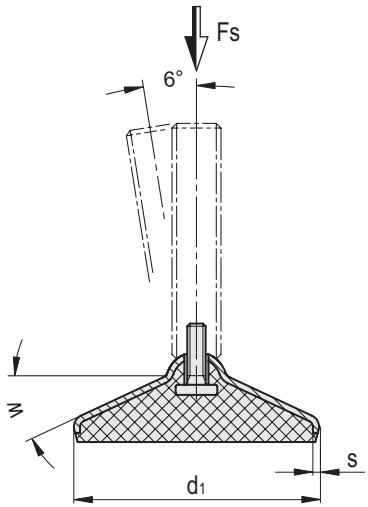

GN 17-VK

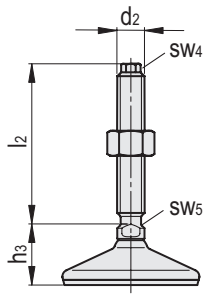

GN 17-W

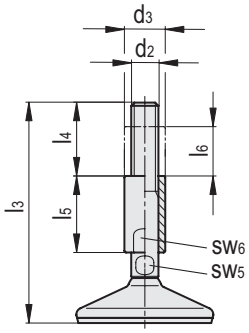

GN 17-VK

Kod	Benämning	l_2	d_1	d_2	h_3	w [°]	s	sw_4	sw_5	Statisk belastning [KN]	⚖
GN.85032	GN 17-60-M16-75-C4-VK	75	60	M16	33	32	2	10	12	14	260
GN.85036	GN 17-60-M16-100-C4-VK	100	60	M16	33	32	2	10	12	14	299
GN.85040	GN 17-60-M16-125-C4-VK	125	60	M16	33	32	2	10	12	14	339
GN.85046	GN 17-60-M16-150-C4-VK	150	60	M16	33	32	2	10	12	14	379
GN.85112	GN 17-80-M16-75-C4-VK	75	80	M16	35	26	2	10	12	14	333
GN.85116	GN 17-80-M16-100-C4-VK	100	80	M16	35	26	2	10	12	14	372
GN.85120	GN 17-80-M16-125-C4-VK	125	80	M16	35	26	2	10	12	14	412
GN.85126	GN 17-80-M16-150-C4-VK	150	80	M16	35	26	2	10	12	14	452
GN.85144	GN 17-80-M20-100-C4-VK	100	80	M20	36	26	2	13	16	32	501
GN.85148	GN 17-80-M20-125-C4-VK	125	80	M20	36	26	2	13	16	32	563
GN.85152	GN 17-80-M20-150-C4-VK	150	80	M20	36	26	2	13	16	32	625
GN.85160	GN 17-80-M20-200-C4-VK	200	80	M20	36	26	2	13	16	32	749
GN.85172	GN 17-80-M24-100-C4-VK	100	80	M24	38	26	2	17	20	36	674
GN.85178	GN 17-80-M24-150-C4-VK	150	80	M24	38	26	2	17	20	36	853
GN.85184	GN 17-80-M24-200-C4-VK	200	80	M24	38	26	2	17	20	36	1030
GN.85252	GN 17-100-M16-75-C4-VK	75	100	M16	37	22	2	10	12	24	428
GN.85256	GN 17-100-M16-100-C4-VK	100	100	M16	37	22	2	10	12	24	467
GN.85260	GN 17-100-M16-125-C4-VK	125	100	M16	37	22	2	10	12	24	507
GN.85266	GN 17-100-M16-150-C4-VK	150	100	M16	37	22	2	10	12	24	547
GN.85284	GN 17-100-M20-100-C4-VK	100	100	M20	38	22	2	13	16	26	696
GN.85288	GN 17-100-M20-125-C4-VK	125	100	M20	38	22	2	13	16	26	658
GN.85292	GN 17-100-M20-150-C4-VK	150	100	M20	38	22	2	13	16	26	720
GN.85300	GN 17-100-M20-200-C4-VK	200	100	M20	38	22	2	13	16	26	844
GN.85312	GN 17-100-M24-100-C4-VK	100	100	M24	40	22	2	17	20	28	769
GN.85318	GN 17-100-M24-150-C4-VK	150	100	M24	40	22	2	17	20	28	948
GN.85324	GN 17-100-M24-200-C4-VK	200	100	M24	40	22	2	17	20	28	1125

GN 17-W

Kod	Benämning	l_3	d_1	l_4	l_5	l_6	d_2	d_3	w [°]	s	sw_5	sw_6	Statisk belastning [KN]	⚖
GN.85043	GN 17-60-M16-129-C4-W	129	60	45	45	29	M16	24	32	2	12	20	14	350
GN.85049	GN 17-60-M16-154-C4-W	154	60	45	45	29	M16	24	32	2	12	20	14	390
GN.85051	GN 17-60-M16-179-C4-W	179	60	45	45	29	M16	24	32	2	12	20	14	430
GN.85055	GN 17-60-M16-204-C4-W	204	60	45	45	29	M16	24	32	2	12	20	14	469
GN.85123	GN 17-80-M16-131-C4-W	131	80	45	45	29	M16	24	26	2	12	20	14	423
GN.85129	GN 17-80-M16-156-C4-W	156	80	45	45	29	M16	24	26	2	12	20	14	463
GN.85131	GN 17-80-M16-181-C4-W	181	80	45	45	29	M16	24	26	2	12	20	14	503
GN.85135	GN 17-80-M16-206-C4-W	206	80	45	45	29	M16	24	26	2	12	20	14	542
GN.85155	GN 17-80-M20-155-C4-W	155	80	56	56	36	M20	30	26	2	16	24	32	659
GN.85157	GN 17-80-M20-180-C4-W	180	80	56	56	36	M20	30	26	2	16	24	32	721
GN.85163	GN 17-80-M20-205-C4-W	205	80	56	56	36	M20	30	26	2	16	24	32	783
GN.85167	GN 17-80-M20-255-C4-W	255	80	56	56	36	M20	30	26	2	16	24	32	908
GN.85181	GN 17-80-M24-179-C4-W	179	80	67	67	42	M24	35	26	2	20	30	36	988
GN.85187	GN 17-80-M24-229-C4-W	229	80	67	67	42	M24	35	26	2	20	30	36	1165
GN.85189	GN 17-80-M24-279-C4-W	279	80	67	67	42	M24	35	26	2	20	30	36	1345
GN.85263	GN 17-100-M16-133-C4-W	133	100	45	45	29	M16	24	22	2	12	20	24	518
GN.85269	GN 17-100-M16-158-C4-W	158	100	45	45	29	M16	24	22	2	12	20	24	558
GN.85271	GN 17-100-M16-183-C4-W	183	100	45	45	29	M16	24	22	2	12	20	24	598
GN.85275	GN 17-100-M16-208-C4-W	208	100	45	45	29	M16	24	22	2	12	20	24	637
GN.85295	GN 17-100-M20-157-C4-W	157	100	56	56	36	M20	30	22	2	16	24	26	754
GN.85297	GN 17-100-M20-182-C4-W	182	100	56	56	36	M20	30	22	2	16	24	26	816
GN.85303	GN 17-100-M20-207-C4-W	207	100	56	56	36	M20	30	22	2	16	24	26	878
GN.85307	GN 17-100-M20-257-C4-W	257	100	56	56	36	M20	30	22	2	16	24	26	963
GN.85321	GN 17-100-M24-181-C4-W	181	100	67	67	42	M24	35	22	2	20	30	28	1085
GN.85327	GN 17-100-M24-231-C4-W	231	100	67	67	42	M24	35	22	2	20	30	28	1260
GN.85329	GN 17-100-M24-281-C4-W	281	100	67	67	42	M24	35	22	2	20	30	28	1440

Proprietà dei modelli riservata ai termini di legge. Disegni e immagini non riproducibili se non citando la fonte.

Ganter Norm

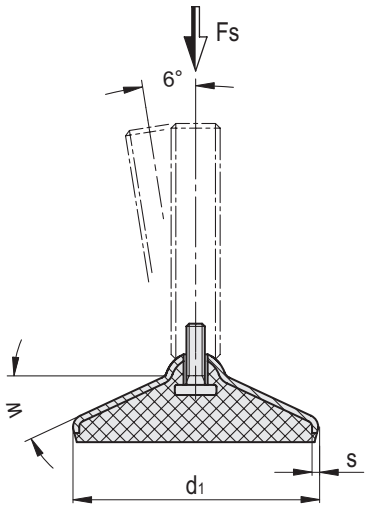

GN 17-VK

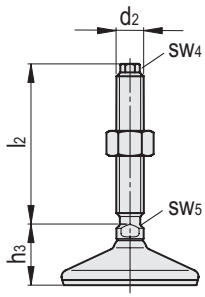

GN 17-W

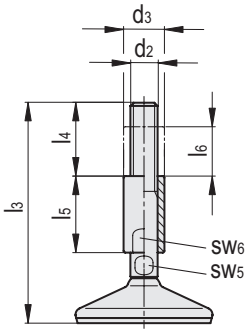

GN 17-VK

INOX STAINLESS STEEL

Kod	Benämning	l_2	d_1	d_2	h_3	w [°]	s	sw_4	sw_5	Statisk belastning [KN]	⚖
GN.85034	GN 17-60-M16-75-C7-VK	75	60	M16	33	32	2	10	12	14	260
GN.85038	GN 17-60-M16-100-C7-VK	100	60	M16	33	32	2	10	12	14	299
GN.85042	GN 17-60-M16-125-C7-VK	125	60	M16	33	32	2	10	12	14	339
GN.85048	GN 17-60-M16-150-C7-VK	150	60	M16	33	32	2	10	12	14	379
GN.85114	GN 17-80-M16-75-C7-VK	75	80	M16	35	26	2	10	12	14	333
GN.85118	GN 17-80-M16-100-C7-VK	100	80	M16	35	26	2	10	12	14	372
GN.85122	GN 17-80-M16-125-C7-VK	125	80	M16	35	26	2	10	12	14	412
GN.85128	GN 17-80-M16-150-C7-VK	150	80	M16	35	26	2	10	12	14	452
GN.85146	GN 17-80-M20-100-C7-VK	100	80	M20	36	26	2	13	16	32	501
GN.85150	GN 17-80-M20-125-C7-VK	125	80	M20	36	26	2	13	16	32	563
GN.85154	GN 17-80-M20-150-C7-VK	150	80	M20	36	26	2	13	16	32	625
GN.85162	GN 17-80-M20-200-C7-VK	200	80	M20	36	26	2	13	16	32	749
GN.85174	GN 17-80-M24-100-C7-VK	100	80	M24	38	26	2	17	20	36	674
GN.85180	GN 17-80-M24-150-C7-VK	150	80	M24	38	26	2	17	20	36	853
GN.85186	GN 17-80-M24-200-C7-VK	200	80	M24	38	26	2	17	20	36	1030
GN.85254	GN 17-100-M16-75-C7-VK	75	100	M16	37	22	2	10	12	24	428
GN.85258	GN 17-100-M16-100-C7-VK	100	100	M16	37	22	2	10	12	24	467
GN.85262	GN 17-100-M16-125-C7-VK	125	100	M16	37	22	2	10	12	24	507
GN.85268	GN 17-100-M16-150-C7-VK	150	100	M16	37	22	2	10	12	24	547
GN.85286	GN 17-100-M20-100-C7-VK	100	100	M20	38	22	2	13	16	26	696
GN.85290	GN 17-100-M20-125-C7-VK	125	100	M20	38	22	2	13	16	26	658
GN.85294	GN 17-100-M20-150-C7-VK	150	100	M20	38	22	2	13	16	26	720
GN.85302	GN 17-100-M20-200-C7-VK	200	100	M20	38	22	2	13	16	26	844
GN.85314	GN 17-100-M24-100-C7-VK	100	100	M24	40	22	2	17	20	28	769
GN.85320	GN 17-100-M24-150-C7-VK	150	100	M24	40	22	2	17	20	28	948
GN.85326	GN 17-100-M24-200-C7-VK	200	100	M24	40	22	2	17	20	28	1125

GN 17-W

Kod	Benämning	l_3	d_1	l_4	l_5	l_6	d_2	d_3	w [°]	s	sw_5	sw_6	Statisk belastning [KN]	⚖
GN.85044	GN 17-60-M16-129-C7-W	129	60	45	45	29	M16	24	32	2	12	20	14	350
GN.85050	GN 17-60-M16-154-C7-W	154	60	45	45	29	M16	24	32	2	12	20	14	390
GN.85052	GN 17-60-M16-179-C7-W	179	60	45	45	29	M16	24	32	2	12	20	14	430
GN.85056	GN 17-60-M16-204-C7-W	204	60	45	45	29	M16	24	32	2	12	20	14	469
GN.85124	GN 17-80-M16-131-C7-W	131	80	45	45	29	M16	24	26	2	12	20	14	423
GN.85130	GN 17-80-M16-156-C7-W	156	80	45	45	29	M16	24	26	2	12	20	14	463
GN.85132	GN 17-80-M16-181-C7-W	181	80	45	45	29	M16	24	26	2	12	20	14	503
GN.85136	GN 17-80-M16-206-C7-W	206	80	45	45	29	M16	24	26	2	12	20	14	542
GN.85156	GN 17-80-M20-155-C7-W	155	80	56	56	36	M20	30	26	2	16	24	32	659
GN.85158	GN 17-80-M20-180-C7-W	180	80	56	56	36	M20	30	26	2	16	24	32	721
GN.85164	GN 17-80-M20-205-C7-W	205	80	56	56	36	M20	30	26	2	16	24	32	783
GN.85168	GN 17-80-M20-255-C7-W	255	80	56	56	36	M20	30	26	2	16	24	32	908
GN.85182	GN 17-80-M24-179-C7-W	179	80	67	67	42	M24	35	26	2	20	30	36	988
GN.85188	GN 17-80-M24-229-C7-W	229	80	67	67	42	M24	35	26	2	20	30	36	1165
GN.85190	GN 17-80-M24-279-C7-W	279	80	67	67	42	M24	35	26	2	20	30	36	1345
GN.85264	GN 17-100-M16-133-C7-W	133	100	45	45	29	M16	24	22	2	12	20	24	518
GN.85270	GN 17-100-M16-158-C7-W	158	100	45	45	29	M16	24	22	2	12	20	24	558
GN.85272	GN 17-100-M16-183-C7-W	183	100	45	45	29	M16	24	22	2	12	20	24	598
GN.85276	GN 17-100-M16-208-C7-W	208	100	45	45	29	M16	24	22	2	12	20	24	637
GN.85296	GN 17-100-M20-157-C7-W	157	100	56	56	36	M20	30	22	2	16	24	26	754
GN.85298	GN 17-100-M20-182-C7-W	182	100	56	56	36	M20	30	22	2	16	24	26	816
GN.85304	GN 17-100-M20-207-C7-W	207	100	56	56	36	M20	30	22	2	16	24	26	878
GN.85308	GN 17-100-M20-257-C7-W	257	100	56	56	36	M20	30	22	2	16	24	26	963
GN.85322	GN 17-100-M24-181-C7-W	181	100	67	67	42	M24	35	22	2	20	30	28	1085
GN.85328	GN 17-100-M24-231-C7-W	231	100	67	67	42	M24	35	22	2	20	30	28	1260
GN.85330	GN 17-100-M24-281-C7-W	281	100	67	67	42	M24	35	22	2	20	30	28	1440

Ganter Norm®

Proprietà dei modelli riservata ai termini di legge. Disegni e immagini non riproducibili se non citando la fonte.

7/2026

elesa®